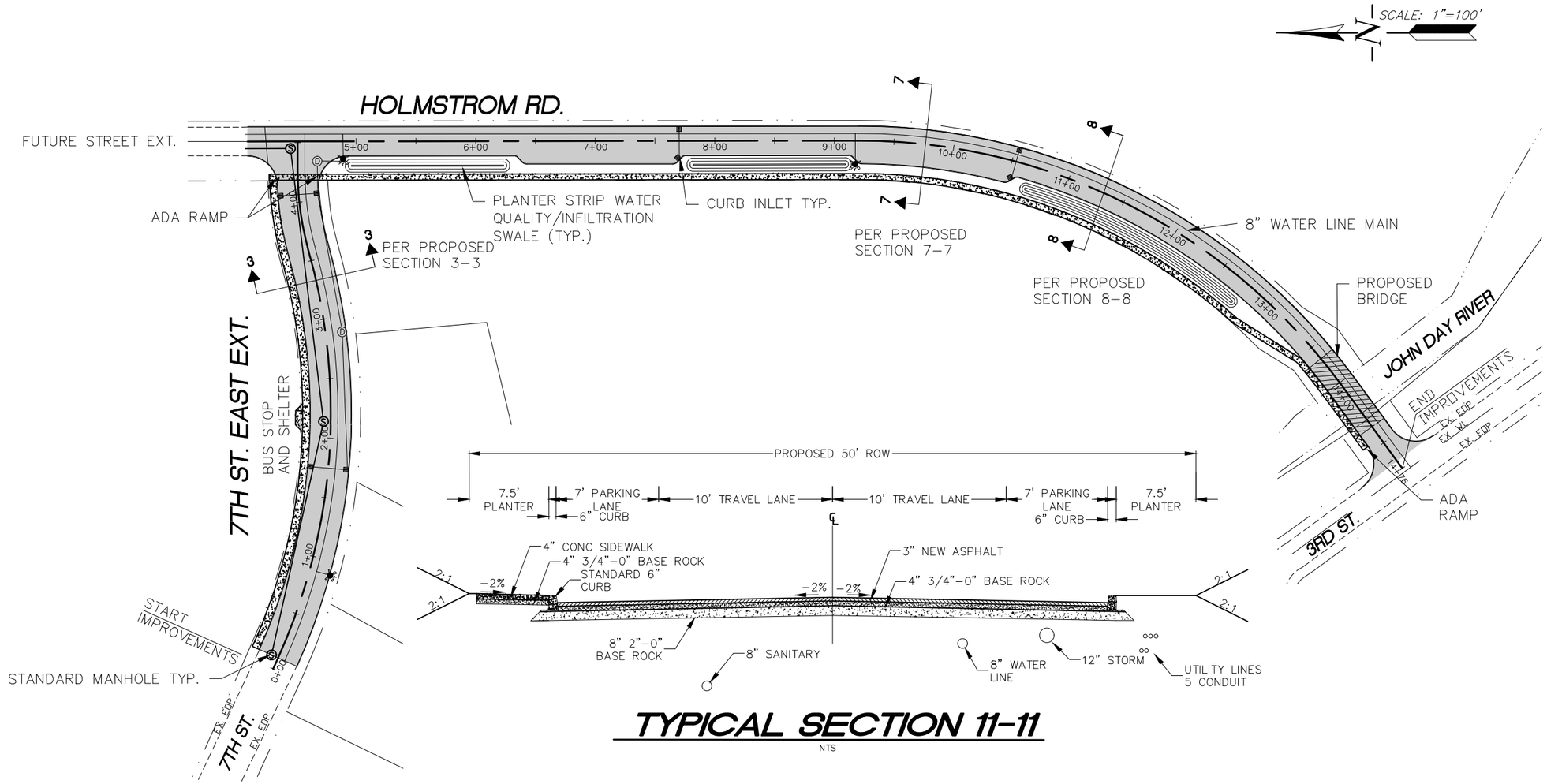

TYPICAL SECTION 11-11

NTS

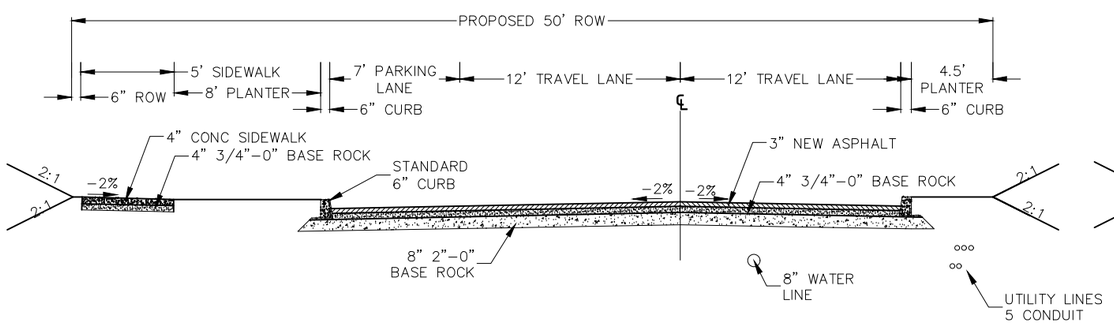

TYPICAL SECTION 3-3

NTS

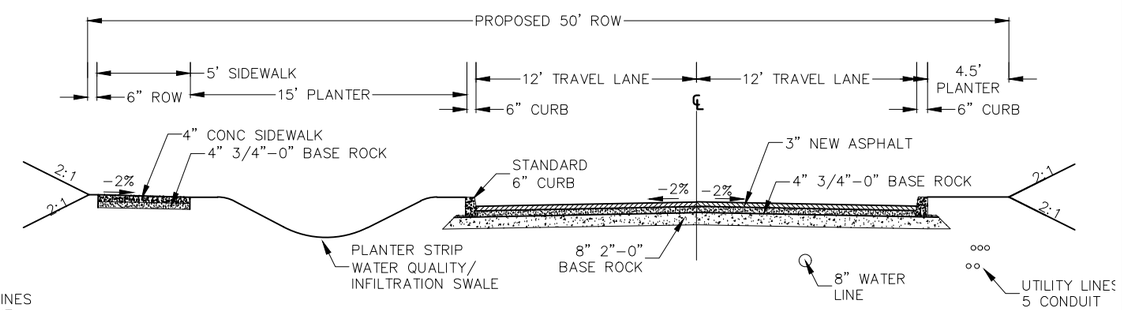

TYPICAL SECTION 4-4

NTS

REVISIONS	BY

7TH STREET EAST EXTENSION AND HOLMSTROM ROAD & BRIDGE

INNOVATION GATEWAY
ECONOMIC REVITALIZATION PROJECT
CITY OF JOHN DAY, OREGON

SISUL ENGINEERING
158 E. MAIN STREET
JOHN DAY, OREGON 97845
(541) 575-3777
DRAWING: GCRD SS PLAN.DWG

DATE	MAY 2020
SCALE	NOTED
DRAWN	GB
JOB	08-001
SHEET	9
OF	17 SHEETS