MEMORANDUM OF UNDERSTANDING BETWEEN THE CITY OF JOHN DAY AND DAVID AND FRANCES HOLMSTROM REGARDING 2019 U.S. DEPARTMENT OF TRANSPORTATION BUILD GRANT

This Memorandum of Understanding ("MOU") is entered into on July 15, 2019 ("Effective Date") by and between the City of John Day ("City"), an incorporated city in Grant County, Oregon and Dave and Fran Holmstrom ("Holmstroms"), who own certain real property within and adjacent to the city limits.

WHEREAS, City is applying for the U.S. Department of Transportation's 2019 Build Grant to improve access to reliable transportation and promote regional connectivity and economic growth in the John Day area; and

WHEREAS, City owns approximately 90-acres of buildable land around the John Day River and U.S. Highway 26 (the "Area") that is currently disconnected from city streets and state highways; and

WHEREAS, City has developed a master plan for the Area that includes creating new residential, commercial and industrial opportunities as well as public recreation and open space (the "Project"); and

WHEREAS, City has created a team of public and private agencies to improve the Area's infrastructure, including but not limited to water, wastewater, reclaimed water, electric and broadband services; and

WHEREAS, Holmstroms own approximately 3,400 acres of real property surrounding John Day, including 130 acres within city limits zoned Residential General, as shown in Exhibit A; and

WHEREAS, the City and Holmstroms wish to work together to promote their mutual interests in extending and improving the Project infrastructure to promote new residential housing opportunities;

NOW THEREFORE in consideration of the mutual covenants and agreements set forth herein, and for other good and valuable consideration, the City and Holmstroms agree as follows:

1. <u>2019 Build Grant Application</u>: City will apply for the 2019 Build Grant to assist in funding the Project and in extending infrastructure in the Area, including but not limited to preliminary and final engineering, site design and utility services.

2. Public Right-of-Way. Holmstrom's will make available to City adequate right-of-way within their property to accomplish the Project scope of work that affects their property, as shown in Exhibit B, which includes:

a. Extension of Charolais Heights from its current terminus east and south, following the route of the existing gravel drive, to the intersection with 7th Street.
b. Extension of Charolais Heights from 7th Street to the John Day River.
c. New bridge across the John Day River connecting 3rd Street to 7th Street.

3. Residential Development. City and Holmstroms will coordinate planning and development of residential housing upon completion of the street infrastructure for the Project, as shown in Exhibit C, which includes:

a. A subdivision partition of four lots on the north side of Charolais Heights, beginning at the eastern edge of the existing developments.
b. Right-of-way and utility access capable of servicing future residential developments.

4. Term. Unless terminated prior to the expiration date in accordance with the terms and conditions of this MOU, the term of this MOU shall be for a period of twelve (12) months from the Effective Date. The parties may decide to extend the term of this MOU at any time by mutual agreement in writing.

5. Proprietary Information.

a. The term "proprietary information" used in this MOU means confidential information and/or data exchanged between the parties in oral, visual, written, printed, or electronic form during the course of their communications. The parties agree to protect each other's proprietary information. Proprietary information must be clearly marked as such in writing by the disclosing party within ten (10) days of such disclosure. The parties agree that any proprietary information will be used solely for the purposes outlined in this MOU and neither party will divulge such proprietary information to any person or other parties without prior written consent of the disclosing party. The standard of care for protecting such information, imposed on the party receiving proprietary information, will be that degree of care the receiving party uses to prevent disclosure, publication or dissemination of its own proprietary information.

b. Proprietary information does not include information which: (1) is in the public domain at the time of disclosure or thereafter enters the public domain other than through a breach of this MOU; (2) is lawfully obtained from a third party under circumstances permitting the receiving party to use or disclose the information without

restriction; (3) is independently developed by the receiving party; or (4) is required to be disclosed as a result of the Oregon Public Records Law, ORS 192.410 *et seq.*, or by governmental or judicial action.

c. Upon termination or expiration of this MOU, unless prior to the termination or expiration the parties mutually sign and execute one or more definitive agreements regarding the transactions contemplated by this MOU, the receiving party shall return or destroy the other party's proprietary information.

6. Indemnification. The City, including its elected and appointed officials, and Holmstroms, agree to mutually indemnify and hold each other harmless from and against any and all claims, damages, losses, liabilities, and expenses (including reasonable attorneys' fees, incurred in connection with investigating or defending against any such claims, damages, losses or liabilities), related to or arising out of their activities hereunder. Notwithstanding the foregoing, neither party shall be liable for indemnification with respect to any loss, claim, damage, liability, or expense if, by a final judgment, such loss, claim, damage, liability, or expense primarily resulted from the other party's willful misconduct or gross negligence in performing its obligations hereunder.

7. Dispute Resolution**.** The City and Holmstroms shall attempt in good faith to resolve any controversy, claim, or dispute between them arising out of or relating to this MOU and the transactions contemplated hereby, by prompt negotiation between representatives who have authority to settle the dispute. If any dispute is not resolved by mutual agreement, the parties may, by mutual written consent, submit the dispute to non-binding mediation, in a forum and according to the procedures jointly agreed to by the parties. If non-binding mediation does not result in a resolution of the dispute, then the parties shall submit the dispute to binding arbitration in accordance with the rules and processes of the American Arbitration Association.

8. Assignment. Neither the City nor Holmstroms may assign this MOU or any part thereof or interest therein without the prior express written consent of the other party.

9. Governing Law. The interpretation and enforcement of this MOU shall be governed by the laws and regulations of the State of Oregon applicable to agreements made to be performed entirely within that state.

10. Change in Law: In the event there is a change in a federal or state statute or regulation applicable to this MOU, either party may notify the other party in writing of its desire to amend this MOU in order to comply with the change in statute or regulation. The City and Holmstroms may by written request amend this MOU to comply with such change in statute or regulation provided that such amendment is approved by both parties.

11. Amendment: This MOU may be amended only by a written amendment that is signed by the authorized representatives of both parties.

12. Severability: Should any provision or sections of this MOU be determined to be void, invalid, or otherwise unenforceable by any court of competent jurisdiction, that determination shall not affect the remaining provisions or sections of this MOU, which shall remain in full force and effect.

IN WITNESS WHEREOF, This MOU shall inure to the benefit of and be binding upon the parties and their respective successors and assigns.

HOLMSTROMS

Name: Dave Holmstrom

Sign.:

Date: 7/15/19

Name: Fran Holmstrom

Sign.: Fran Holmstrom

Date: 7/15/19

CITY OF JOHN DAY

Name: Nicholas Green

Title: City Manager

Date: 07.15.2019

Sign.:

Exhibit A. Holmstrom Property in Project Area

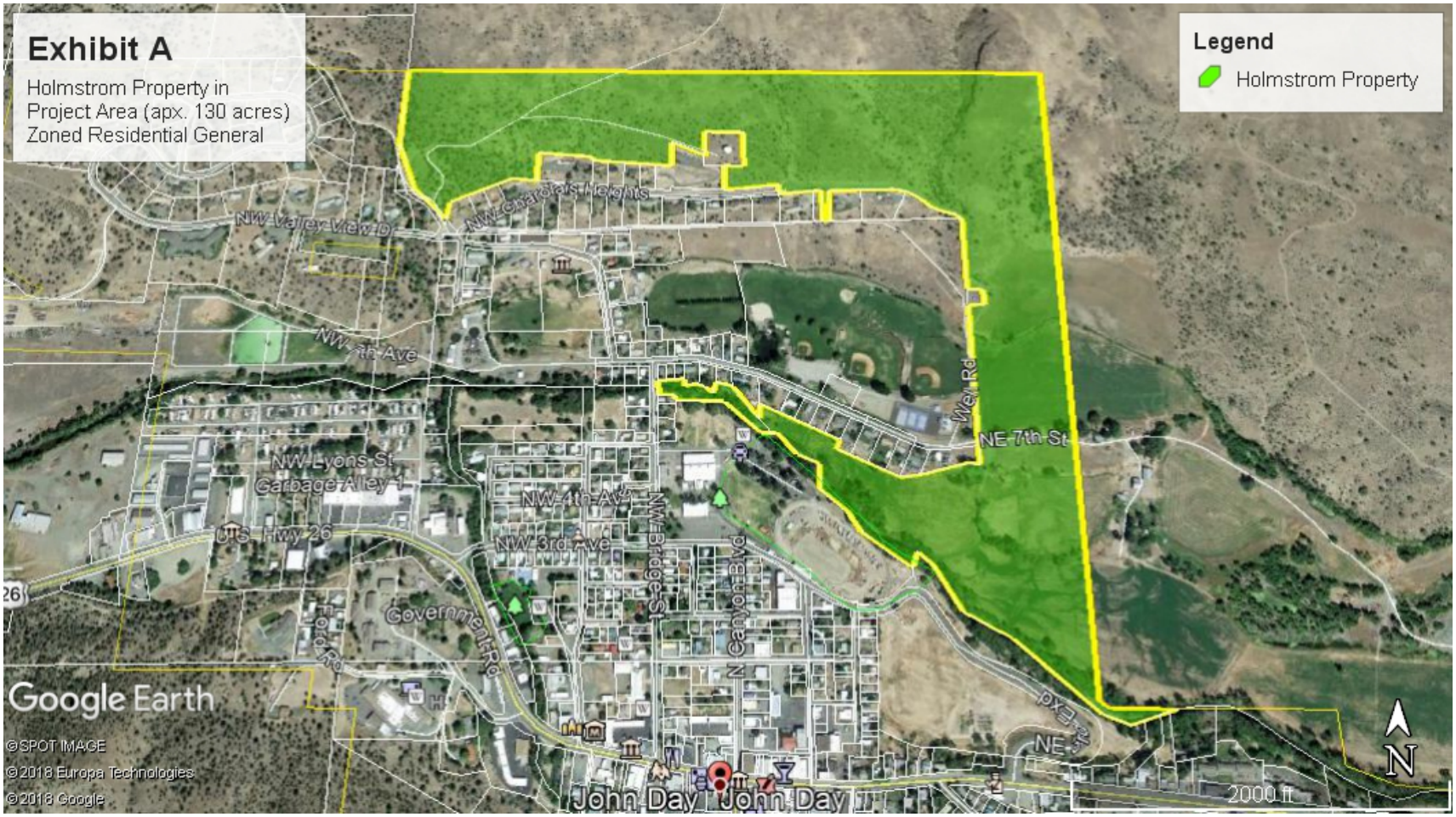

Exhibit B. Project Area Maps

[enclosed]

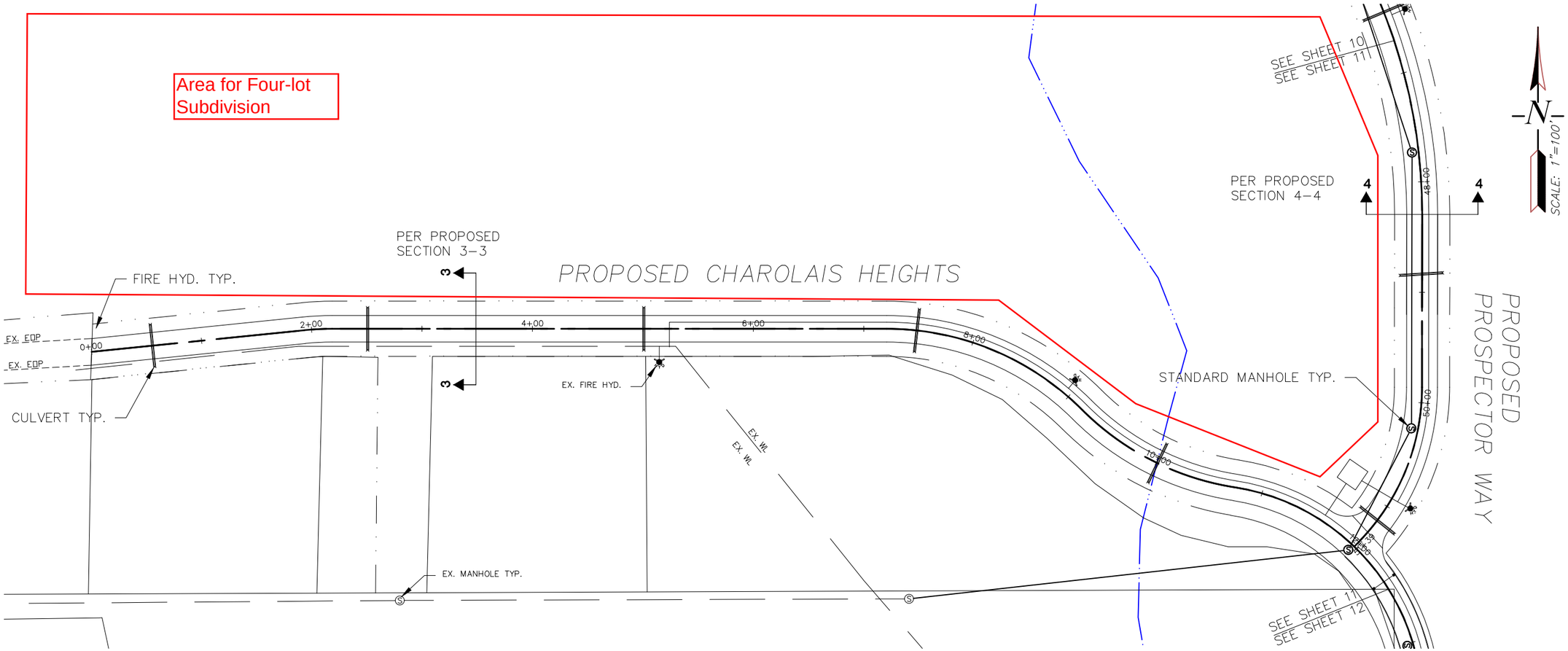

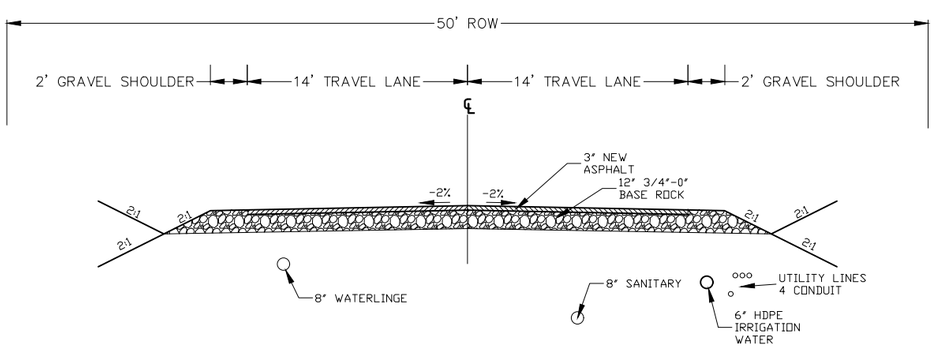

TYPICAL SECTION 4-4

NTS

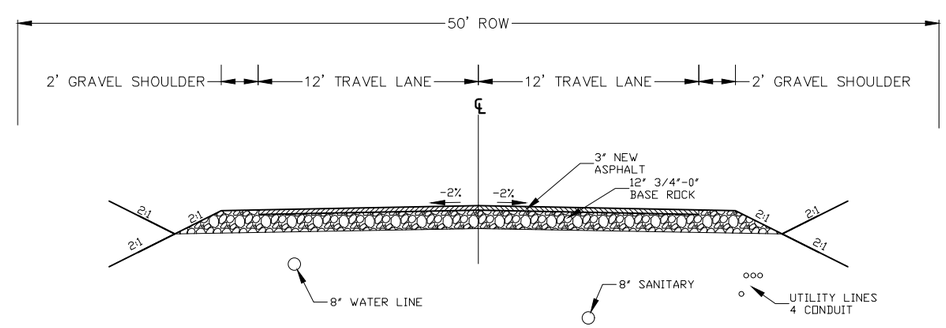

TYPICAL SECTION 5-5

NTS

REVISIONS	BY

CITY INFRASTRUCTURE IMPROVEMENT PLAN

CITY OF JOHN DAY

CHAROLAIS HEIGHTS AND PROSPECTOR WAY
STA 0+00 – 12+00

ISUL ENGINEERING
158 E. MAIN STREET
JOHN DAY, OREGON 97845
(541) 575-3777

DRAWING: CCRD SS PLAN.DWG

DATE	JULY 2019
SCALE	NOTED
DRAWN	GB
JOB	XX-XXX
SHEET	XX
OF XX	SHEETS

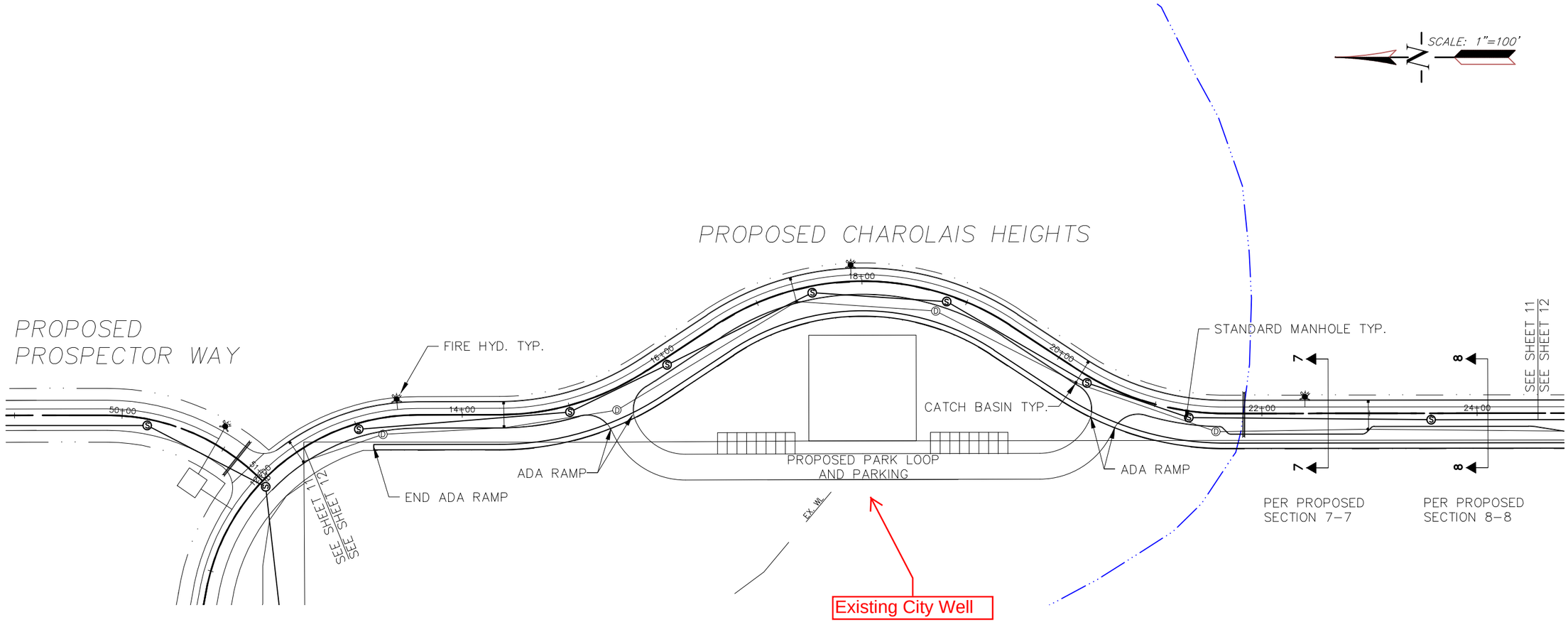

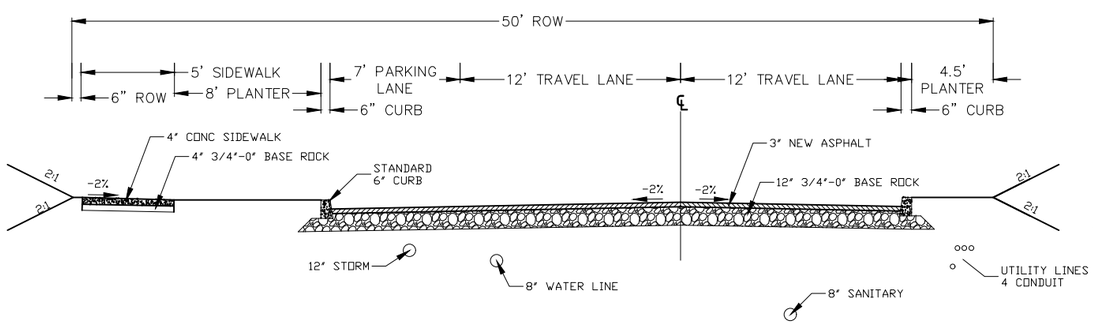

TYPICAL SECTION 7-7

NTS

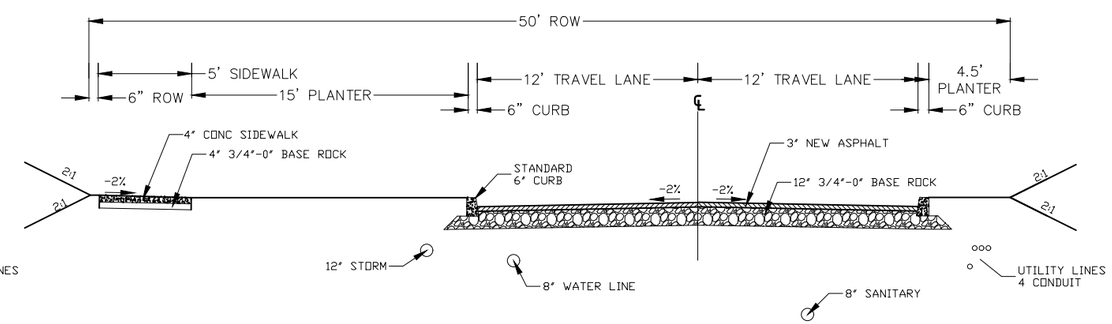

TYPICAL SECTION 8-8

NTS

REVISIONS	BY

CITY INFRASTRUCTURE IMPROVEMENT PLAN

CITY OF JOHN DAY

CHAROLAIS HEIGHTS
STA 12+00 – 24+00

ISUL ENGINEERING
158 E. MAIN STREET
JOHN DAY, OREGON 97845
(541) 575-3777

DRAWING: GCRD SS PLAN.DWG

DATE	JULY 2019
SCALE	NOTED
DRAWN	GB
JOB	XX-XXX
SHEET	XX
OF XX	SHEETS

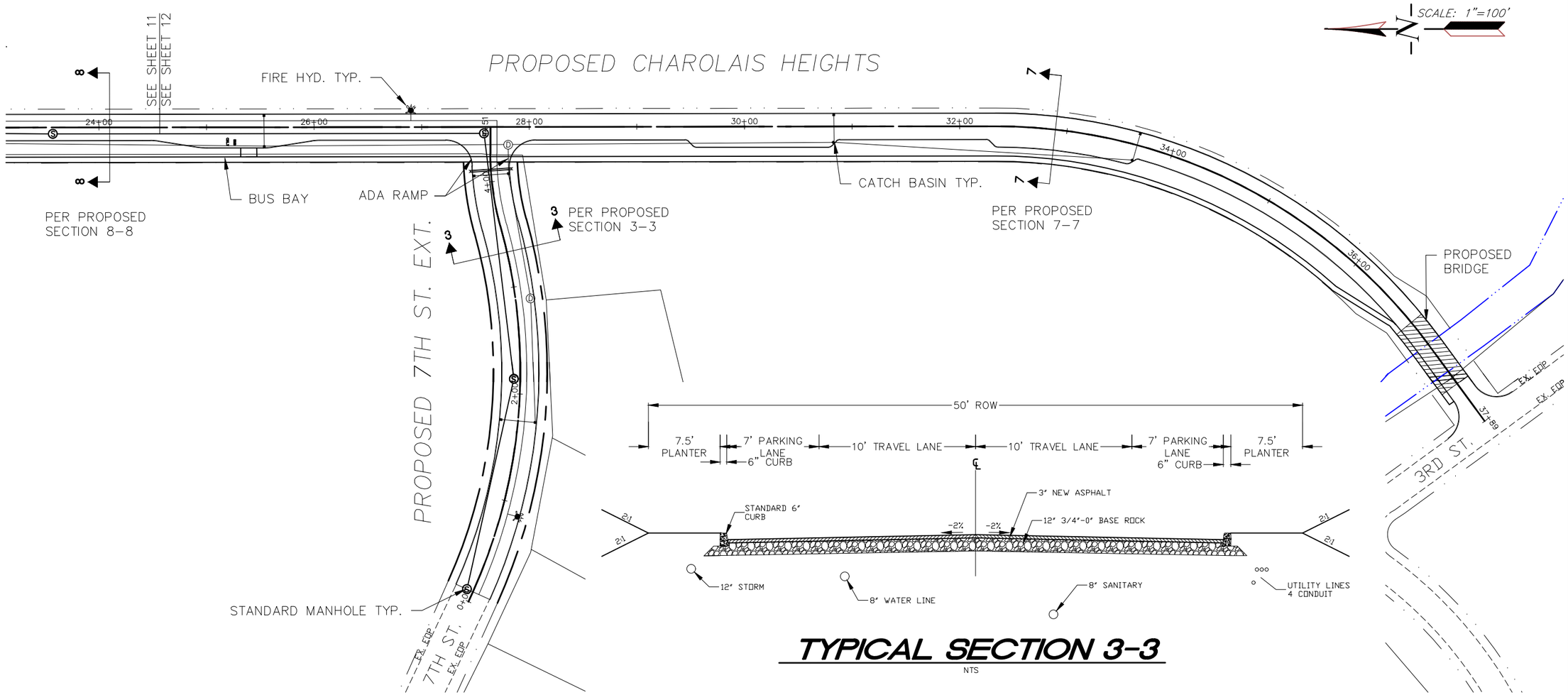

TYPICAL SECTION 3-3

NTS

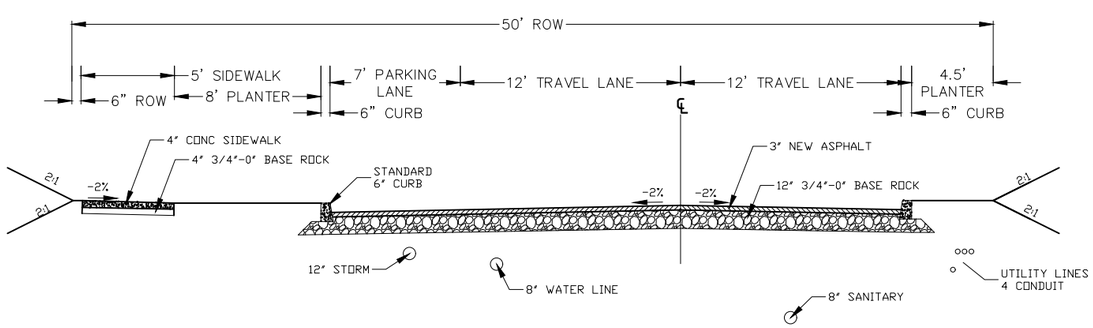

TYPICAL SECTION 7-7

NTS

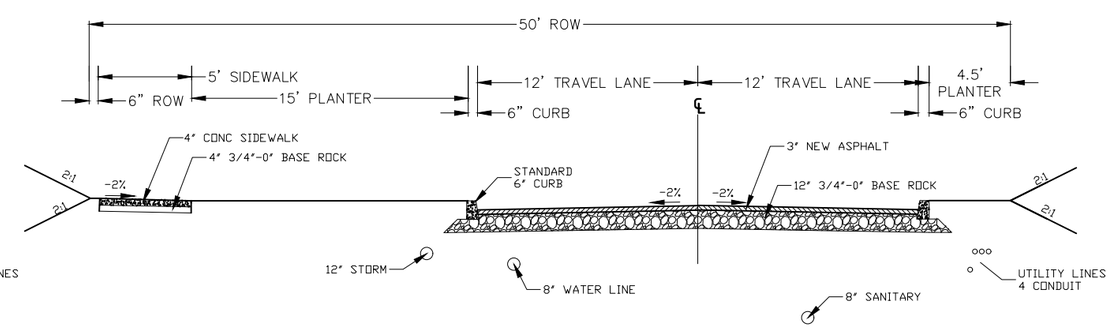

TYPICAL SECTION 8-8

NTS

REVISIONS	BY

CITY INFRASTRUCTURE IMPROVEMENT PLAN

CITY OF JOHN DAY

CHAROLAIS HEIGHTS AND
7TH STREET EXTENSTION
STA 24+00 – 37+76

ISUL ENGINEERING
158 E. MAIN STREET
JOHN DAY, OREGON 97845
(541) 575-3777
DRAWING: GCRD SS PLAN.DWG

DATE	JULY 2019
SCALE	NOTED
DRAWN	GB
JOB	XX-XXX
SHEET	XX
OF XX	SHEETS

Exhibit C. Charolais Heights 4-Lot Subdivision and Future Residential Development

[Enclosed]

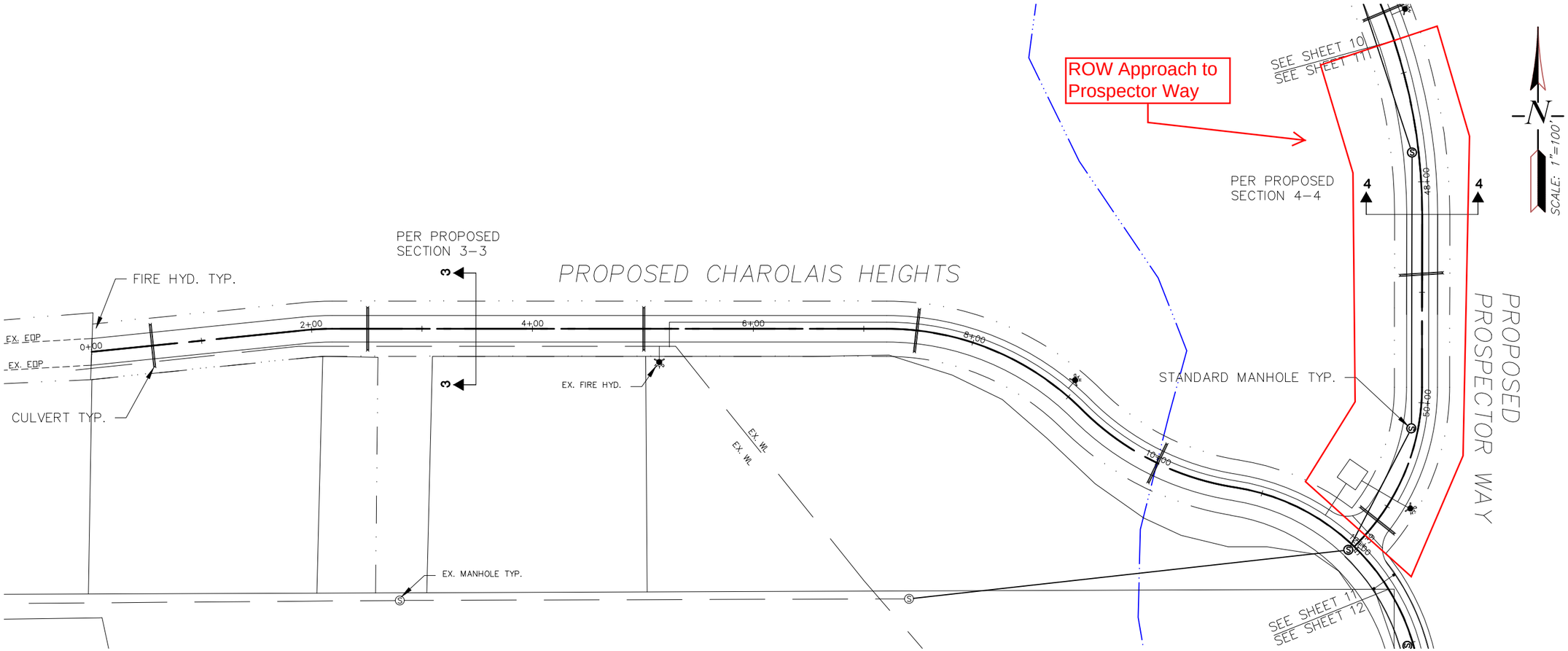

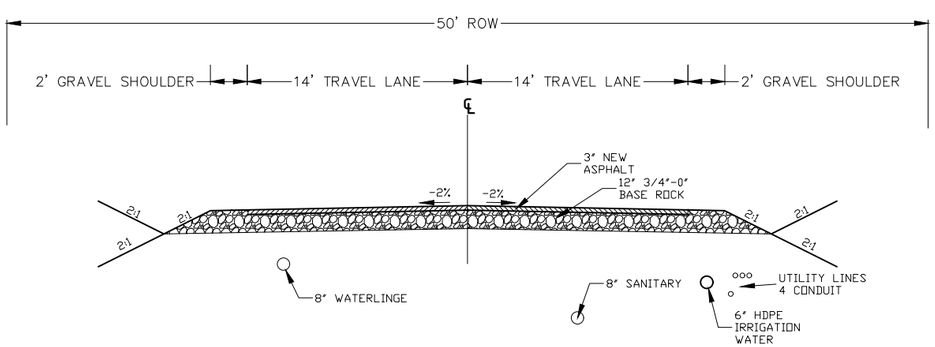

TYPICAL SECTION 4-4

NTS

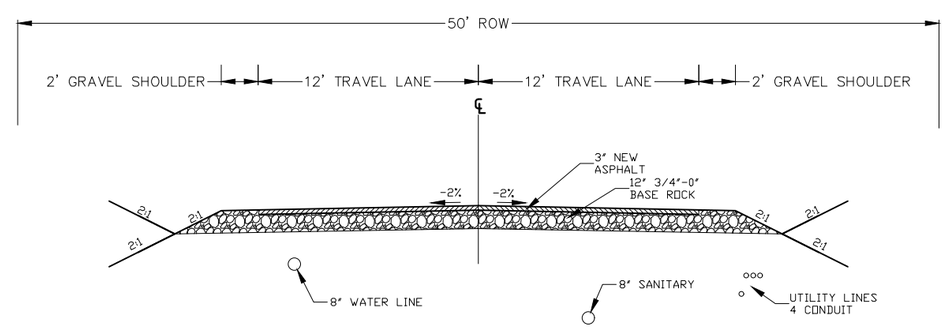

TYPICAL SECTION 5-5

NTS

REVISIONS	BY

CITY INFRASTRUCTURE IMPROVEMENT PLAN

CITY OF JOHN DAY

CHAROLAIS HEIGHTS AND PROSPECTOR WAY
STA 0+00 – 12+00

ISUL ENGINEERING
158 E. MAIN STREET
JOHN DAY, OREGON 97845
(541) 575-3777

DRAWING: CCRD SS PLAN.DWG

DATE	JULY 2019
SCALE	NOTED
DRAWN	GB
JOB	XX-XXX
SHEET	XX
OF XX	SHEETS

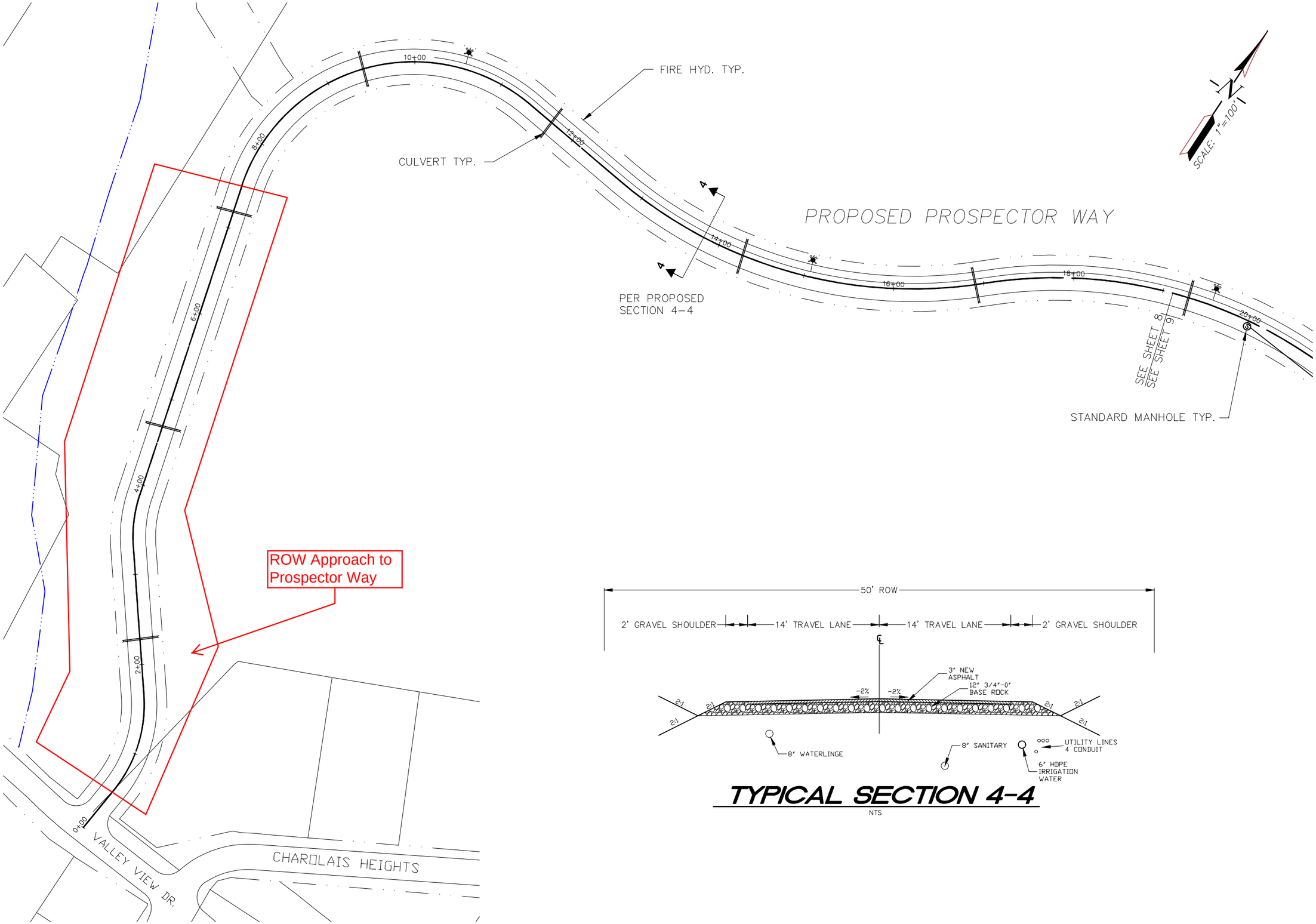

REVISIONS	BY
...	...
...	...

CITY INFRASTRUCTURE IMPROVEMENT PLAN

CITY OF JOHN DAY

PROSPECTOR WAY
STA 0+00 – 19+00

ISUL ENGINEERING
158 E. MAIN STREET
JOHN DAY, OREGON 97845
(541) 575-3777
DRAWING: GCRD SS PLAN.DWG

DATE	JULY 2019
SCALE	NOTED
DRAWN	GB
JOB	XX-XXX
SHEET	XX
OF XX	SHEETS